Dimensions are approximate.

Unit: mm

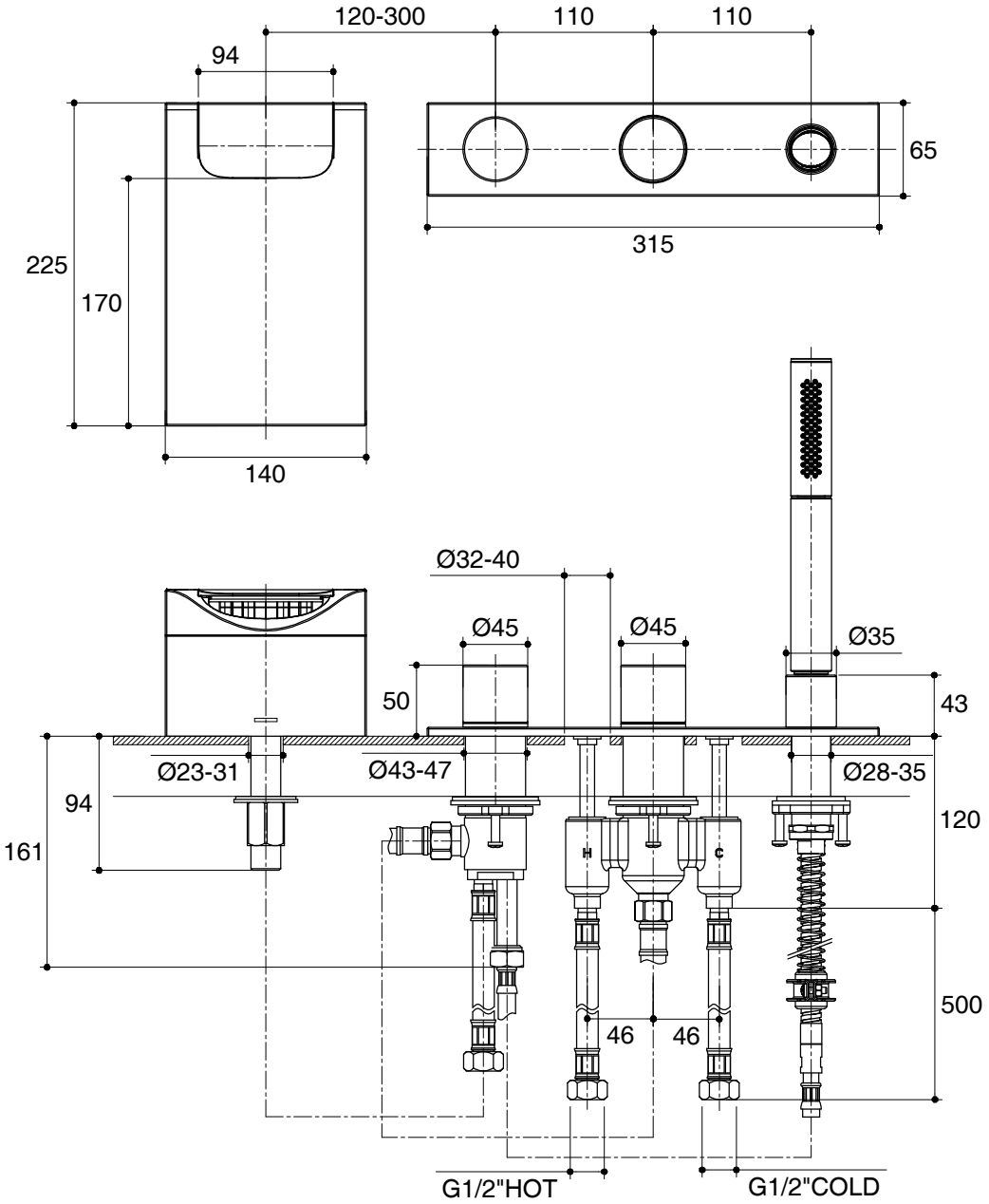

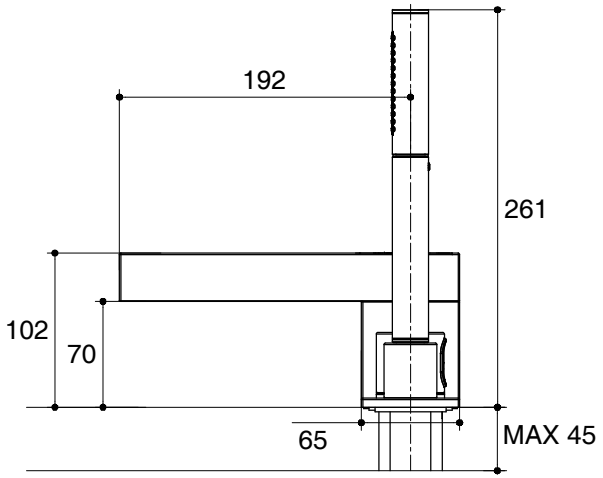

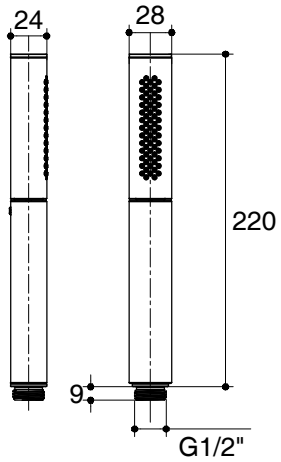

SKU	**K-99874X-9**
Name	**BEITOU**
Description	**DECK-MOUNT BATH SHOWER FAUCET**

KOHLER

*The recommended dimension for installation can be adjusted according to user preferences and layout.